ARD-IPCD5414-W

Starlight

4MP Starlight Motorized Zoom Dome Network Camera

With an advanced deep learning algorithm, ArdentView's network camera supports intelligent functions, such as perimeter protection and smart motion detection. With starlight technology, this series camera provides an outstanding image in low illuminance. ArdentView VSaaS compatible.

IP67

Key Features

- High quality imaging with 4MP resolution
- Motorized varifocal lens for easy installation and monitoring
- Efficient H.265+ compression technology
- Clear imaging against strong backlight due to 120dB WDR technology
- Water and dust resistant (IP67) and vandal proof (IK10)
- Built-in microphone for real-time audio security
- NDAA Compliant

Dimensions

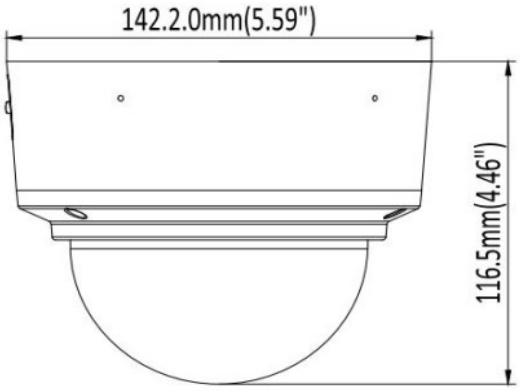

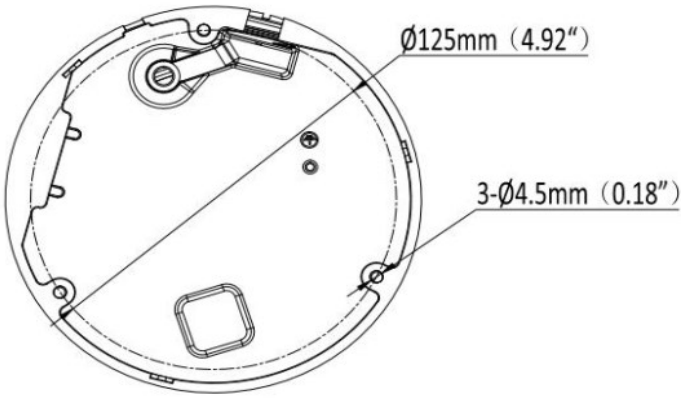

Specification

Camera	
Image Sensor	1/2.7" Progressive Scan CMOS Sensor
Min. Illumination	0.006 lux (Color) , 0 lux (IR on)
Illumination Distance	50m (IR light)
Strobe Light	Support
Smart IR	Support
Pan/Tilt/Rotation Range	Pan: 0° ~ 355° Tilt: 0° ~ 75° Rotation: 0° ~ 355°
Lens	
Focal Length	2.7-13.5 mm
Aperture	F1.6
FOV	horizontal FOV: 112° to 35.5°, Vertical FOV: 59° to 20°, Diagonal FOV: 134° to 41°
Lens Mount	ϕ14
DORI	
DORI	2.7-13.5mm, D: 72 m to 206 m, O: 27.9 to 81.5 m, R: 14 m to 40.8 m, I: 7 m to 20.4 m
Compression Standard	
Video Compression	H.264/H.264+/H.265/H.265+/MJPEG
H.264 Codec Profile	Base/Main/High profile
H.265 Codec Profile	Main Profile
Video Bit Rate	11 Kbps ~ 8 Mbps
Triple Streams	N/A
Audio Compression	G.711A (A Model), G711U
Audio Bit Rate	64 Kbps (A Model)
Image	
Max. Image Resolution	4M (2688 × 1520)
Main Stream	50Hz: 20fps 4M (2688 × 1520) 25fps 4M (2560 × 1440) , 25fps 1080P (1920 × 1080) 60Hz: 20fps 4M (2688 × 1520) 30fps 4M (2560 × 1440) , 30fps 1080P (1920 × 1080)
Sub Stream	50Hz: 25fps 720P (1280 × 720) 25fps D1 (704 × 576), 25fps CIF (352 × 288) 60Hz: 30fps 720P (1280 × 720) 30fps D1 (704 × 480), 30fps CIF (352 × 240)
Third Stream	N/A

Image Setting	Brightness/Contrast/Saturation/Hue/Sharpness
Shutter Time	Auto/Manual, 1/3~1/100000s
Day/Night	IR cut filter with auto switch
Wide Dynamic Range	120 dB
Digital Noise Reduction	2D/3D DNR
BLC	Support
HLC	Support
ROI	Support
Rotate	Support
Smart Feature	
Basic Event	Motion detection (human and vehicle targets classification) , video shelter
Smart Event	Line Crossing , Area Intrusion (support alarm triggering by specified target types (human and vehicle))
Face Detection	N/A
Network	
Network Storage	NAS (NFS , SMB/CIFS) , ANR
Protocols	TCP/IP, ICMP, HTTP, HTTPS, FTP, DHCP, DNS, DDNS, RTP, RTSP, RTCP, NTP, IGMP, UPnP, SMTP, UPnP-TM, P2P
System Compatibility	ArdentView VSaaS Uplink, Onvif (Profile S, Profile G, T) , SDK
Security	Password protection, complicated password, HTTPS encryption, IP address filter, basic and digest authentication for HTTP/HTTPS, TLS 1.1/1.2, WSSE and digest authentication for Open Network Video Interface
User	Up to 10 users
Web Browsers	Plug-in required live view: IE 10, IE 11 Local service: Chrome 57.0+, Firefox 52.0+
Mobile Surveillance	IOS , Android
Interface	
Communication Interface	1 RJ45 10 M/100 M self-adaptive Ethernet port
On-board Storage	Up to 256GB
MIC	Support
Speaker	N/A
Audio I/O	N/A
Alarm I/O	N/A
Reset Button	Support
General	
Operating Conditions	(-40°C ~ 60°C) (-40°F ~ 140°F) Humidity 95% or less (non-condensing)

Power Supply	DC12V ± 25%
POE	PoE (802.3 af)
Power Consumption	MAX.8.5 W
Protection Level	IP67
Material	Metal
Dimensions	Φ 5.59'' × 4.46'' (142.2 × 116.5mm)
Gross Weight	2.18 lb (990 g)

Related Accessories

ARD-IPC5400MK - ArdentView 5400 Series Camera Mount Kit

PN ARD-IPC5400MK ArdentView IP Camera Mounting Kit.

- Mix and Match Parts To Create The Mount Required per Camera Location
- No Need To Understanding Mount Prior to Install
- 1 ARD-IPC5400MK Does It All for Every ArdentView Camera

Includes:

- Round Camera Adapter Plate (1)
- 4 inch Weathertight Conduit Box (1)
- Square Conduit Box Mounting Plate (1)
- Corner Mount Adapters (2)
- Pole Mount Adapters (2)
- ¾ inch Pipe Wall Mount
- Hardware To Assemble Any Mount Style
- All Hardware is Stainless Steel
- All Parts Are White Powdercoated

Corner Mount with Conduit Box and ArdentView Camera Adapter Plate - Example

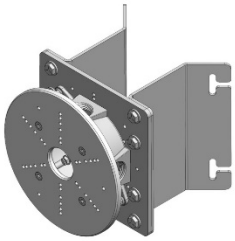

Wall Mount with Conduit Box and ArdentView Camera Adapter Plate - Example

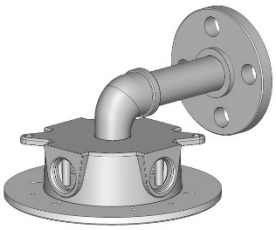

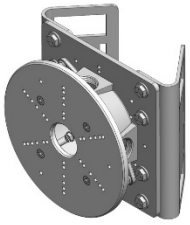

Pole Mount with Conduit Box and ArdentView Camera Adapter Plate - Example

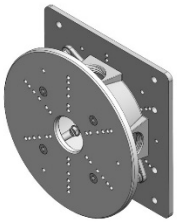

Wall Plate with Conduit Box and ArdentView Camera Adapter Plate - Example