ARD-IPCMD5406-W 4MP

Micro Dome Network Camera

Empowered by deep learning algorithms, ArdentViewe technology brings human and vehicle targets classification alarms to your system. The camera focuses on human and vehicle targets, vastly improving alarm efficiency and effectiveness. ArdentView VSaaS compatible.

Key Features

- High quality imaging with 4MP resolution
- Efficient H.265+ compression technology
- Clear imaging against strong backlight due to 120dB WDR technology
- Focus on human and vehicle targets classification based on deep learning
- Water and dust resistant (IP67) and vandal proof (IK10)
- Built-in microphone for real-time audio security
- NDAA Compliant

Dimensions

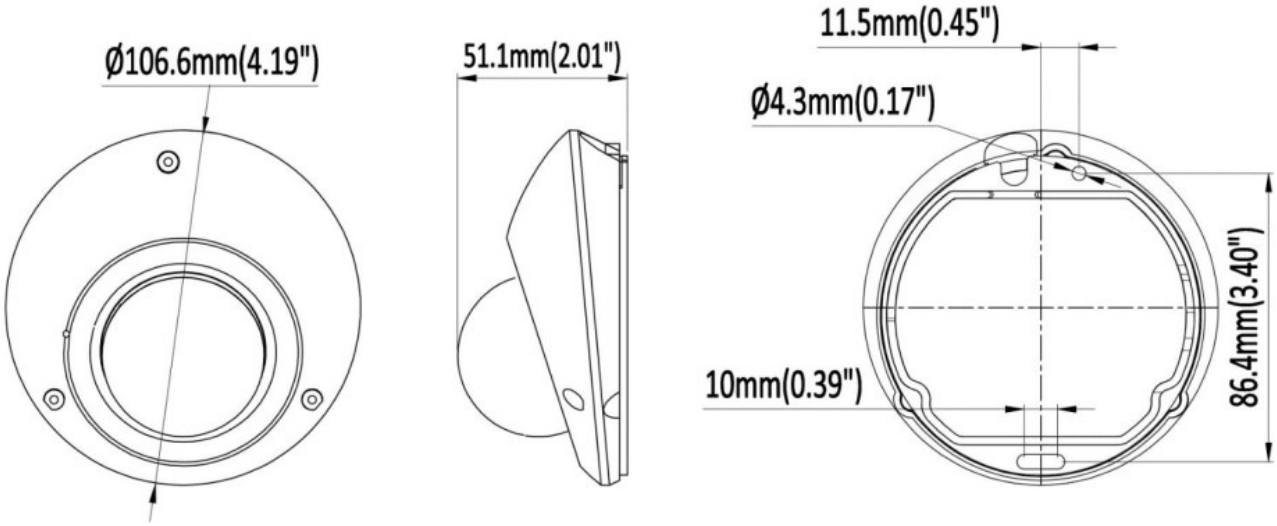

Specification

Camera	
Image Sensor	1/2.7" Progressive Scan CMOS Sensor
Min. Illumination	0.006 lux (Color), 0 lux (IR on)
Illumination Distance	20m (IR light)
Strobe Light	N/A
Smart IR	Support
Pan/Tilt/Rotation Range	Pan: 0° ~ 30° Tilt: 0° ~ 70° Rotation: 0° ~ 30°
Lens	
Focal Length	2.8 mm
Aperture	F1.6
FOV	2.8mm @ F1.6 horizontal FOV 111° , vertical FOV 60°diagonal FOV 132°
Lens Mount	M12
DORI	
DORI	2.8 mm , D: 67 m, O: 25.5 m, R: 12.8 m, I: 6.4 m
Compression Standard	
Video Compression	H.264/H.264+/H.265/H.265+/MJPEG
H.264 Codec Profile	Base/Main/High profile
H.265 Codec Profile	Main Profile
Video Bit Rate	11 Kbps ~ 10 Mbps
Triple Streams	Support
Audio Compression	G.711A, G.711U
Audio Bit Rate	64 Kbps
Image	
Max. Image Resolution	4M (2688 × 1520)
Main Stream	50Hz: 25fps 4M (2688 × 1520) 25fps 4M (2560 × 1440) 25fps 1080P (1920 × 1080) 60Hz: 30fps 4M (2688 × 1520) 25fps 4M (2560 × 1440) 30fps 1080P (1920 × 1080)
Sub Stream	50Hz: 25fps 720P (1280 × 720) 25fps D1 (704 × 576), 25fps CIF (352 × 288) 60Hz: 30fps 720P (1280 × 720) 30fps D1 (704 × 480), 30fps CIF (352 × 240)
Third Stream	50Hz: 25fps CIF (352 × 288) 60Hz: 30fps CIF (352 × 240)

Image Setting	Brightness/Contrast/Saturation/Hue/Sharpness
Shutter Time	Auto/Manual, 1/3~1/100000s
Day/Night	IR cut filter
Wide Dynamic Range	120 dB
Digital Noise Reduction	2D/3D DNR
BLC	Support
HLC	Support
ROI	Support
Rotate	Support
Smart Feature	
Basic Event	Motion detection (support alarm triggering by specified target types (human and vehicle)), video shelter
Smart Event	Line crossing detection, Area intrusion, Region Entrance, Region Exiting (support alarm triggering by specified target types (human and vehicle)) Scene Change Detection
Face Detection	Support
Network	
Network Storage	NAS (NFS, SMB/CIFS) , ANR
Protocols	TCP/IP, ICMP, HTTP, HTTPS, FTP, DHCP, DNS, DDNS, RTP, RTSP, RTCP, NTP, IGMP, UPnP, SMTP, UPnP-TM, P2P
System Compatibility	ArdentView VSaaS Uplink, Onvif (Profile S, Profile G, T) , SDK
Security	Password protection, complicated password, HTTPS encryption, IP address filter, basic and digest authentication for HTTP/HTTPS, TLS 1.1/1.2, WSSE and digest authentication for Open Network Video Interface
User	Up to 40 users
Web Browsers	Plug-in required live view: IE 10, IE 11 Local service: Chrome 57.0+, Firefox 52.0+
Mobile Surveillance	IOS, Android
Interface	
Communication Interface	1 RJ45 10 M/100 M self-adaptive Ethernet port
On-board Storage	Up to 256GB
MIC	Support
Speaker	N/A
Audio I/O	1/1
Alarm I/O	1/1 Alarm Out (max.12 VDC, 20mA)
Reset Button	Support
General	

Operating Conditions	(-40°C ~ 60°C) (-40°F ~ 140°F) Humidity 95% or less (non-condensing)
Power Supply	DC12V ± 25%
POE	PoE (802.3 af)
Power Consumption	MAX. 4.8 W
Protection Level	IP67
Material	Metal
Dimensions	Φ 4.19'' × 2.01'' (106.6 × 51.1 mm)
Gross Weight	1.02 lb (465 g)

Related Accessories – Please Contact Factory

This Camera was designed to be placed into a ceiling without additional mounting accessories